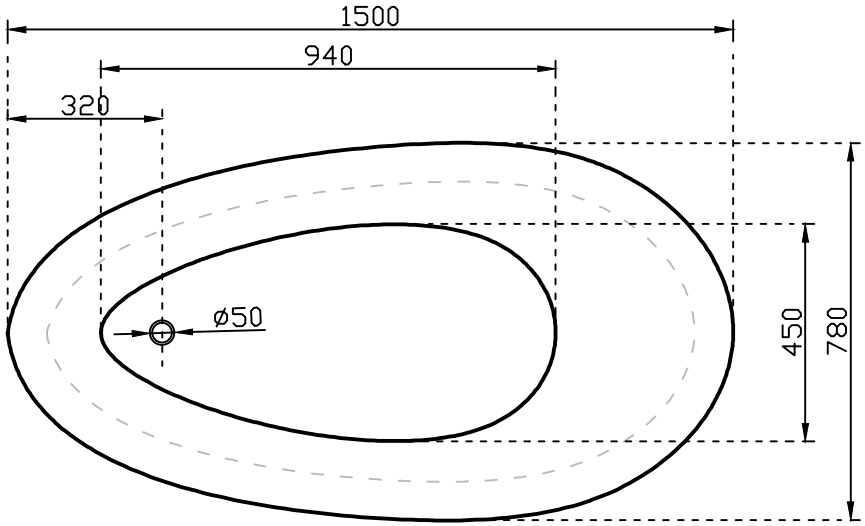

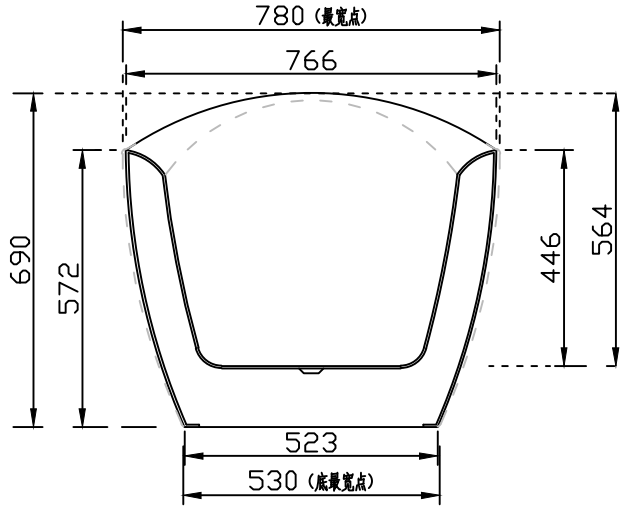

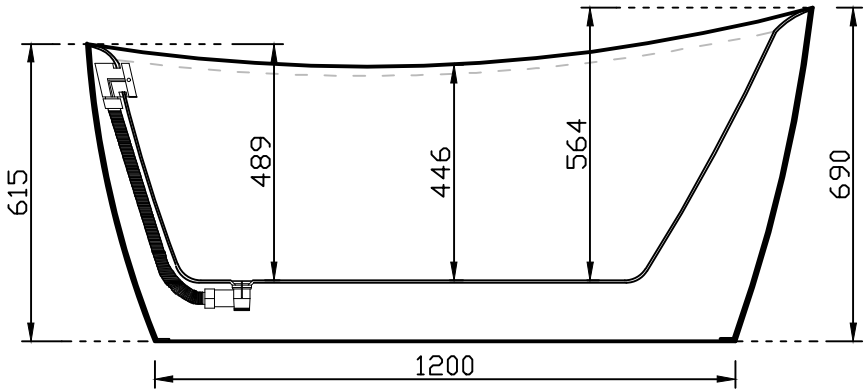

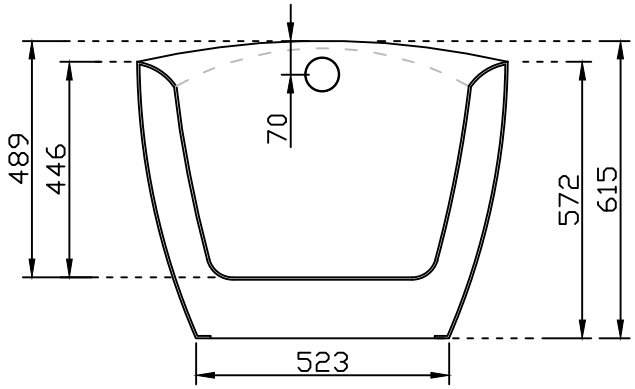

Name:	032C-1.5	Numbers:		Units:	mm						
Code:		Meaterial:	Acrylic	Tolerance:	±5mm	Draftsman:		revise:		Auditing:	
Dimensions:	1500×780×690	Projection:		Proportion:	1:18	Date:		Date:		Authorize:	